Dynamic RSVP Protocol

Geng-Sheng Kuo, National Chengchi University
Po-Chang Ko, National Kaohsiung University of Applied Sciences

ABSTRACT

RSVP is a resource reservation setup protocol that can be used by a host to request specific QoS for multicast multimedia flows on the Internet. Multiprotocol label switching (MPLS) architecture [1] also needs RSVP [2, 3]. It is noted that the resolutions of the display system used in different receiver nodes might be different, multi-resolution characteristic is supported in MPEG-4 standard, and the EZW compression algorithm can cease decoding at any point in the bitstream. However, RSVP does not provide a more flexible mechanism. In this article we propose an extension of RSVP to provide the needed mechanism, coined *Dynamic RSVP* (DRSVP), to dynamically adjust reserved resources on nodes without much effort. It provides different video resolutions to different receiver nodes with different needed reserved resources. Therefore, it does not waste precious Internet resources to transmit unnecessary multimedia packets.

INTRODUCTION

In 1993, the Resource Reservation Protocol (RSVP) was first proposed [4]. Due to its usefulness and attraction, many efforts had been spent on it; the Internet Engineering Task Force (IETF) had standardized the RSVP as Request for Comments (RFC) 2205, released in 1997 [5]. In order to provide specific quality of service (QoS), RSVP plays a crucial role. Obviously, its wide acceptance on the Internet has been achieved. RSVP [5] can be used by a host to request specific QoS from the network for multicast multimedia flows on the Internet [4, 6]. Both multiprotocol label switching (MPLS) and generalized MPLS (GMPLS) architectures [1, 7] also needs RSVP [2, 3] to establish the label-switched paths (LSPs). In order to guarantee specific QoS, required resources can be reserved by using RSVP. However, the RSVP cannot provide a more flexible resource reservation mechanism.

It is reasonable that a variety of end systems with different display devices will be used on the future multimedia-oriented Internet. IP mobility is going to emphasize the end-to-end bandwidth-sensitive issue of multimedia transmission. Considering the multicast multimedia services on the Internet, it is noted that the resolutions of the display systems used in different receiver nodes might be considerably different. Therefore, the guaranteed resources that need to be reserved might be remarkably different. In general, the sender node encodes the video source in MPEG formatted packets, and transmits them to the receiver node(s) on the Internet. When receiving these video packets, the receiver node decodes them and displays them according to its own allowable resolution. If the display system used in receiver node cannot support the resolution, used in the encoding of video, the transmission process wastes precious Internet resources.

MPEG-4 is the international standard compression format used to encode video sources. Currently, it is widely used in the world. One important characteristic of MPEG-4 is its support of multiresolution [8, 9]. Another is the scalable coding of video [8, 9], which means that an MPEG-4 bitstream has different traffic loading, and the needed resource is different. Its compression algorithm has made a lot of progress in image transmission. Also, the Embedded Zerotree Wavelet algorithm (EZW) [10], which can cease decoding at any point in the bitstream and still generate exactly the same image encoded at the bit rate corresponding to the truncated bitstream, is provided. Therefore, it is important to give a bandwidth range for transmitting a video bitstream, and a more flexible resource reservation mechanism is much needed.

The main purpose of this article is to propose an extension on RSVP defined in [5], called Dynamic RSVP (DRSVP), which can provide different reserved resources needed by different video resolutions to different receiver nodes. It does not waste precious resources on the Internet to transmit unnecessary video packets. Especially, it provides a more flexible mechanism to dynamically adjust the reserved resources on nodes, including receiver node(s), sender node and intermediate node(s) along the reserved path. The efforts spent in this dynamic adjustment are very few, because each node just notifies the previous hop and next hop(s) in the reserved path if it wants to make a change.

0163-6804/03/$17.00 © 2003 IEEE

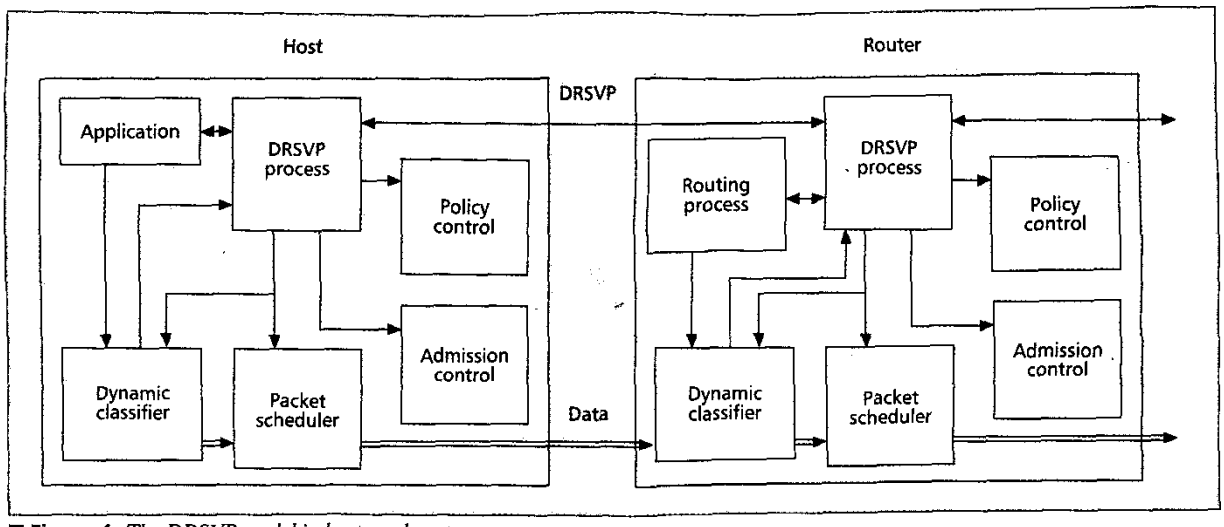

■ **Figure 1.** *The DRSVP model in hosts and routers.*

The rest of this article is organized as follows. In the following section we overview the DRSVP model with its characteristics. Next, we describe the dynamic reservation mechanism in two cases. One is the *setup process*, and the other is the *modify process*, when the dynamic reservation request is achieved successfully. We then provide one complete example to illustrate the setup process and the adjustment in the modify process. Finally, conclusions and further research directions are made to our proposed dynamic reservation model and mechanism for MPEG-4-based video networking.

THE DRSVP MODEL

The DRSVP model is illustrated in Fig. 1. In the model, a DRSVP reservation request is passed to two decision modules — *admission control* and *policy control*, where admission control determines whether this node has sufficient available resource to support the request, and policy control determines whether the user has sufficient privilege to make this reservation. If both decisions are positive, the corresponding parameters of DRSVP are set. The *dynamic classifier* module determines the QoS class and dynamically detects the allowable maximum QoS class for each packet in the host or router. If the change of allowable maximum QoS class is detected, it will signal the *DRSVP process* module. The *packet scheduler* achieves the promised QoS. As described in [5], DRSVP also defines a session as a data flow with a particular destination and transport-layer protocol. Each session is treated independently by DRSVP. A DRSVP session is defined as (DestAddress, ProtocolID, [DstPort]), where DestAddress denotes the destination address, ProtocolID denotes IP protocol ID, and DstPort denotes the destination port number.

An elementary DRSVP reservation request consists of *flowspec* and *filter spec*, called *flow descriptor*. The flowspec specifies the range of desired QoS, represented by (Q_{Max}, Q_{Min}) symbolically, where Q_{Max} denotes the maximum QoS needed, Q_{Min} the minimum. Both Q_{Max} and Q_{Min} are deduced from [11] to compute the minimum MTU. On the other hand, the characteristics of filter spec are the same as those in [5], which define the set of data packets to receive the QoS range defined by the flowspec. The DRSVP is divided into two processes, the *setup process* and *modify process*. In the setup process, DRSVP messages carrying reservation requests at receivers are transmitted upstream to the sender hop by hop. During upstream transmission, at each intermediate node a reservation request triggers two general actions similar to those in [5].

Step 1. Make a Reservation on a Link — The DRSVP request is passed to the admission control and policy control modules. These two modules examine whether the reservation request can be accepted and trigger step 2, or is rejected and returns an error message.

Step 2. Forward the Request Upstream — If step 1 is successful, the reservation request is transmitted upstream continuously to the sender. Before doing this, the reservations from different downstream branches of multicasting tree(s) through this node must be merged into one reservation request. During the merging process, with admission control and policy control in step 1, the flowspec may be modified and transmitted.

On the other hand, the modify process is used in three conditions, when the setup process of a DRSVP request is successful. Each intermediate node in the DRSVP reservation path will adjust its reserved usable QoS by applying the modify process. These three conditions are discussed below.

Condition 1. The Traffic Loading in This Intermediate Node Changes — This means that the available resources are smaller or larger. In this process, the intermediate node evaluates the current usable QoS, Q_{New} and compares Q_{New} with the used QoS. If they are different

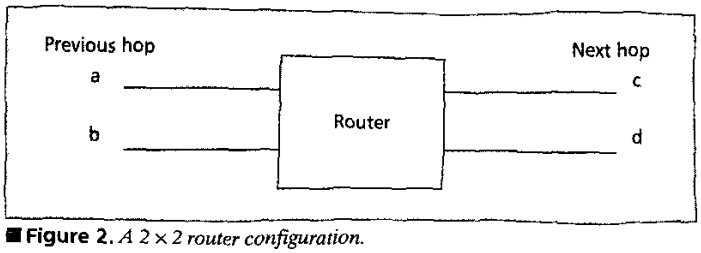

■ **Figure 2.** *A 2 × 2 router configuration.*

and Q_{New} falls in the range of (Q_{Max}, Q_{Min}), the used QoS will be refreshed in the intermediate node. Otherwise, this intermediate node triggers one request to the *next hop* to refresh the used QoS. It also triggers one request to the *previous hop* to refresh the used QoS.

Condition 2. Refresh Request from the Next Hop — After receiving the refresh request, the intermediate node passes the request to the admission control and policy control modules to decide whether it will refresh the used QoS and send this request upstream. On the other hand, if the intermediate node refreshes the used QoS, it will return a successful message, and send the refreshed QoS to the other nodes in the multicasting tree branch.

Condition 3. Refresh Request from the Previous Hop — After receiving the refresh request, the intermediate node passes the request to the admission control and policy control modules to decide whether it will refresh the used QoS. If it does, the intermediate node transmits the refreshed QoS downstream to the nodes in the multicasting tree branch.

From [5], the reservation styles can be divided into three kinds: wildcard filter (WF), fixed filter (FF), and shared explicit (SE). Symbolically, WF, FF, and SE style reservation requests are represented as follows:

WF (* {Q_{Max}, Q_{Min}})
FF (S1 {$Q1_{Max}$, $Q1_{Min}$},
S2 {$Q2_{Max}$, $Q2_{Min}$}, ...)
SE ((S1, S2, ...) {Q_{Max}, Q_{Min}})

DRSVP Mechanisms

There are five fundamental DRSVP message types: *Resv*, *Path*, *Refresh*, *RefreshReq*, and *RefreshAck*. Each receiver node sends the reservation request Resv upstream to the sender node. After receiving a Resv message, the sender node acknowledges a Path message downstream to the receiver node. The characteristics and contents of Resv and Path messages are similar to those in [5]. Both Resv and Path messages are used during the setup process. If any intermediate node detects the change of maximum usable QoS when the reservation is already established in the setup process," it will send a Refresh or RefreshReq message to the next hop(s) and previous hop. After any intermediate node receives a RefreshReq message from the next hop, it sends a RefreshAck message back if allowed. We discuss the setup process and modify process below.

Setup Process

If multiple reservation requests from different next hops for the same session and with the same filter spec enter the same intermediate node, these DRSVP requests will be merged in one DRSVP request. The intermediate node will signal only one DRSVP request to the previous hop(s) in the setup process. It is noted that all Q_{Min}s are the same in the same session, but Q_{Max}s may be different. From the classification of reservation style, each merging process is described as follows. For simplicity, the router configuration is 2 × 2 as shown in Fig. 2.

WF Style — Figure 3 shows the merging process of WF style reservation. During the merging process, separate reservation requests are merged in one reservation request for each upstream sender. Two distinct upstream reservation requests are issued, and the effective flowspec is calculated in Fig. 3.

FF Style — Figure 4 shows the merging process of FF style reservation. There is a separate reservation request for each requested source

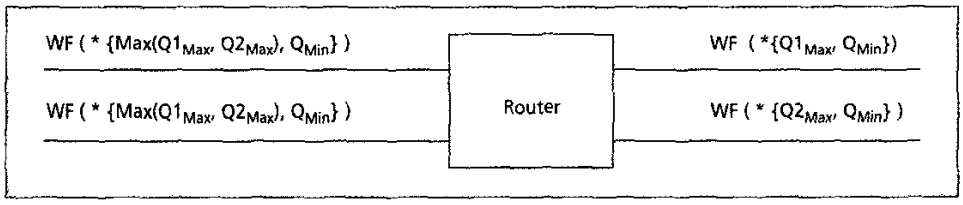

■ **Figure 3.** *WF style reservation.*

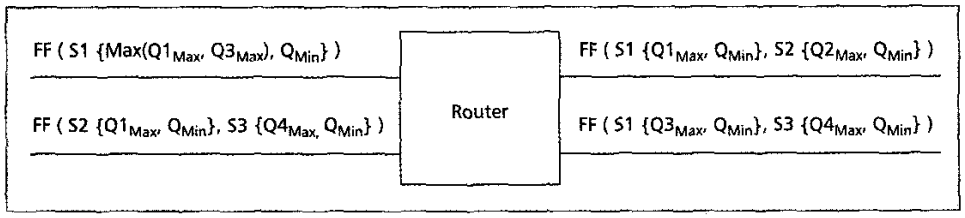

■ **Figure 4.** *FF style reservation.*

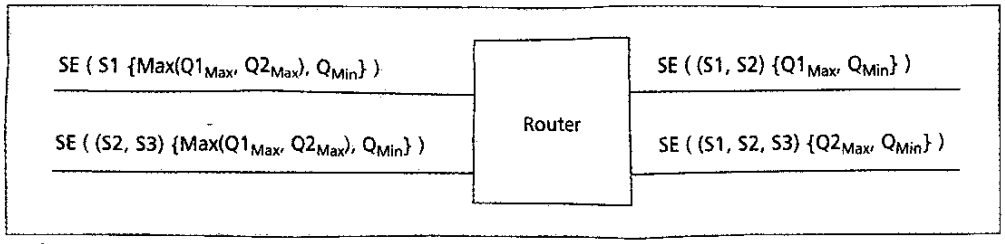

■ **Figure 5.** *SE style reservation.*

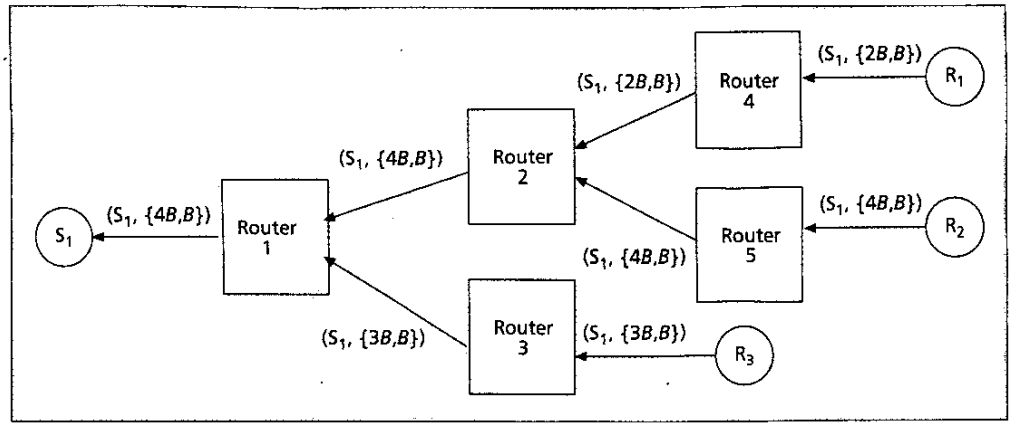

■ **Figure 6.** *One complete DRSVP reservation request example from one single source node to three different receiver nodes.*

All hosts and routers along the reservation path monitor the traffic loading and adjust the available resource dynamically. The possible situations can be classified into two cases: the available resource is smaller and the available resource is larger.

for each outgoing interface. Suppose the previous hop of S2 and S3 is b. During the merging process, the flow descriptors of S2 and S3 are packed (not merged) into one reservation request and forwarded to b. On the other hand, these two reservation requests for sender S1 are merged in one reservation request, and the effective flowspec is calculated in Fig. 4.

SE Style — Figure 5 shows the merging process of SE style reservation. We also assume that the previous hop of S2 and S3 is b. During the merging process, the filter spec is the union of the original filter specs, and Q_{Max} of the effective flowspec is the maximum Q_{Max} of requested flowspecs.

The Modify Process

Being in the modify process means that the reservation request in the setup process has been established successfully. All hosts and routers along the reservation path monitor the traffic loading and adjust the available resources dynamically. The possible situations can be classified into two cases: the available resource is smaller, and the available resource is larger.

The Available Resource Is Smaller — When one node detects that the available resource is smaller, it will adjust its reserved QoS and send a Refresh message downstream and upstream to the nodes, whose reserved QoS is larger, along the DRSVP reservation path. Each node receiving a Refresh message will refresh its reserved QoS and continuously forward this Refresh message upstream or downstream to the nodes whose reserved QoS is larger.

The Available Resource Is Larger — When one node detects that the available resource is larger, the situation becomes more complex. First, this node initiates a RefreshReq message upstream to the previous node to request the larger QoS. This process is similar to the setup process. However, if the new QoS request is not larger than the reserved QoS in the previous node, this previous node will pass the request to the admission control and policy control modules, and not forward it upstream. Based on the result of the examination by these two modules, the previous node will return a success or error message through a RefreshAck message.

A DRSVP Example

Figure 6 shows one example of one single source node to three different receiver nodes. Because DRSVP is a receiver-oriented request protocol, similar to RSVP [5], R_1, R_2, and R_3 will initiate an FF style DRSVP request. Since the display systems used in R_1, R_2, and R_3 may be different, the maximum QoSs needed are different. Assume that the maximum QoSs needed for R_1, R_2, and R_3 are $2B$, $4B$, and $3B$, respectively, where B is some base resource quantity unit similar to that used in [5]. Suppose all of the routers along the transmission path (e.g., routers 1, 2, 3, 4 and 5) have sufficient available resource to support the DRSVP request. The complete process of DRSVP requests initiated by R_1, R_2, and R_3 from receiver nodes to the sender node S_1, including the merging process, is shown in Fig. 6.

In the setup process, the sender node S_1

When one node detects that the available resource is smaller, it will adjust its reserved QoS and send a Refresh message downstream and upstream to the nodes, whose reserved QoS is larger, along the DRSVP reservation path.

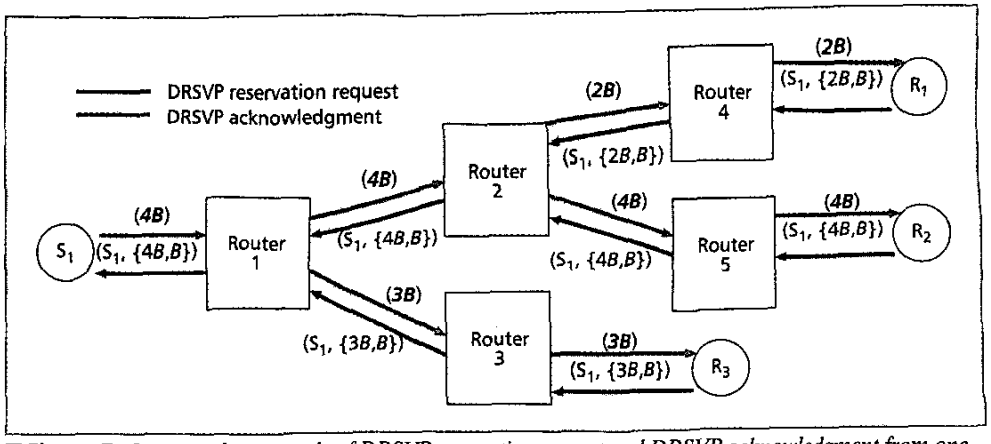

■ **Figure 7.** *One complete example of DRSVP reservation request and DRSVP acknowledgment from one single source node to three different receiver nodes.*

acknowledges the DRSVP request through a Path message. The acknowledgment process from sender node S_1 to receiver nodes R_1, R_2 and R_3 is illustrated in Fig. 7, where italic and bold font denotes each allowable reserved QoS in intermediate nodes of the downstream symbolically. When the acknowledgment reaches all of the receiver nodes, the DRSVP request is successful.

During the DRSVP reservation establishment, all nodes including source node(s), receiver node(s), and intermediate node(s) reserve allowable needed QoS and resource to transmit necessary multimedia packets compressed in MPEG-4 format. However, traffic loading in any node or router on the Internet is dynamic. DRSVP can provide efficient utilization for the available resources of nodes and routers. In this example, when a DRSVP reservation request is established successfully, each node and router along the DRSVP reservation path will monitor the change of traffic loading and adjust the reserved QoS dynamically. In Fig. 7, when router 2 detects that the available resource is 3*B*, it will initiate the Refresh message upstream and downstream. The final result is shown in Fig. 8.

CONCLUSIONS

In this article, DRSVP is proposed. It differs from RSVP defined by RFC 2205 [5] in two aspects. One is that the needed resources in DRSVP are a resource range, not a specific value. The other is that each router along the reserved path can adjust its reserved resources dynamically. It provides routers with the capability to support display systems with different resolution, and supporting the characteristic bitstream of MPEG-4-based video. Because the DRSVP reservation request is initiated from receiver node(s), and the display systems used in receiver node(s) may be different, the reserved resource range is more reasonable and realistic. The utilization of available resources can be further improved in DRSVP in many aspects, because all nodes, including receiver node(s), sender node(s), and intermediate node(s), can adjust their reserved resources according to the corresponding available resources dynamically. Of course, these nodes do not waste the precious resources on the Internet, because each receiver node in the DRSVP reservation request process specifies the maximum resources clearly.

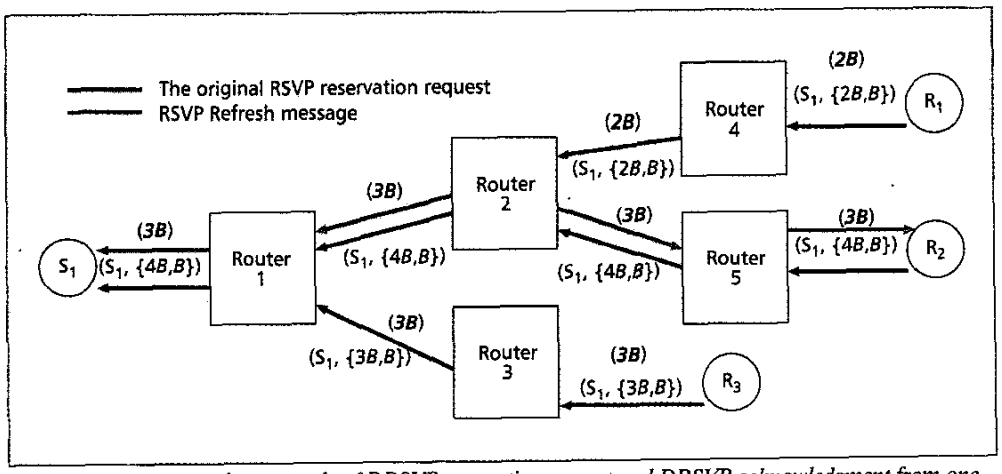

■ **Figure 8.** *One complete example of DRSVP reservation request and DRSVP acknowledgment from one single source node to three different receiver nodes.*

ACKNOWLEDGMENTS

This work was supported by the National Science Council of R.O.C. under Grants NSC 88-2213-E-008-040 and NSC 89-2416-H-008-014.

REFERENCES

[1] E. C. Rosen, A. Viswanathan, and R. Callon, "Multiprotocol Label Switching Architecture," RFC 3031, Jan. 2001.
[2] D. Awduche *et al.*, "RSVP-TE: Extensions to RSVP for LSP Tunnels," RFC 3209, Dec. 2001.
[3] L. Berger, Ed., "Generalized Multi-Protocol Label Switching (GMPLS) Signaling Resource Reservation Protocol-Traffic Engineering (RSVP-TE) Extensions," RFC 3473, Jan. 2003.
[4] L. Zhang *et al.*, "RSVP: A New Resource Reservation Protocol," *IEEE Network*, Sep. 1993, pp. 8–18.
[5] R. Braden *et al.*, "Resource ReSerVation Protocol (RSVP) — Version 1 Functional Specification," RFC 2205, Sept. 1997.
[6] R. Braden, D. Clark, and S. Shenker, "Integrated Services in the Internet Architecture: An Overview," RFC 1633, June 1994.
[7] E. Mannie, Ed., "Generalized Multi-Protocol Label Switching (GMPLS) Architecture," draft-ietf-ccamp-gmpls-architecture-03.txt, Aug. 2002.
[8] L. Chiariglione, "MPEG and Multimedia Communications," *IEEE Trans. Circuits and Systems for Video Tech.*, vol. 7, no. 1, Feb. 1997, pp. 5–18.
[9] T. Sikora, "The MPEG-4 Video Standard Verification Model," *IEEE Trans. Circuits and Sys. for Video Tech.*, vol. 7, no. 1, Feb. 1997, pp. 19–31.
[10] J. M. Shapiro, "Embedded Image Coding Using Zerotrees of Wavelet Coefficients," *IEEE Trans. Sig. Proc.*, vol. 41, no. 12, Dec. 1993, pp. 3445–62.
[11] J. Wroclawski, "The Use of RSVP with IETF Integrated Services," RFC 2210, Sep. 1997.

BIOGRAPHIES

GENG-SHENG (G. S.) KUO (gskuo@ieee.org) received his Ph.D. degree from Case Western Reserve University, Cleveland, Ohio, U.S.A. in January 1983. He then worked with R&D laboratories of the communications industry in the United States, such as AT&T Bell Laboratories, etc. Currently, he is a professor of National Chengchi University, Taipei, Taiwan. He has been invited as Chair Professor of Beijing University of Posts and Telecommunications. His current research interests include broadband switching router technologies, broadband IP-networks, resource allocation of mobile communications networks, GMPLS-based optical communications, and optical MEMS-based optical switch. From 1999 to 2001, he was Chair of Communications Switching & Routing Technical Committee, IEEE Communications Society. He is Editor for Communications Architecture of IEEE Transactions on Communications, Editor of IEEE Communications Surveys, Editor of Wireless Communications & Mobile Computing, and Editor of Wireless Personal Communications: An International Journal (WIRE). From 2001 to 2002, he was Editor-in-Chief of IEEE Communications Magazine. And, he is the ComSoc Representative to Internet Computing Magazine. In addition, he has been contributing to many ICC and Globecom conferences.

PO-CHANG KO is with National Kaohsiung University of Applied Sciences.

During the DRSVP reservation establishment, all of nodes including source node(s), receiver node(s) and intermediate node(s) reserve allowable needed QoS and resource respectively to transmit necessary multimedia packets compressed in MPEG-4 format.